S45-620

Foot Control for PVC Fixtures

Installation

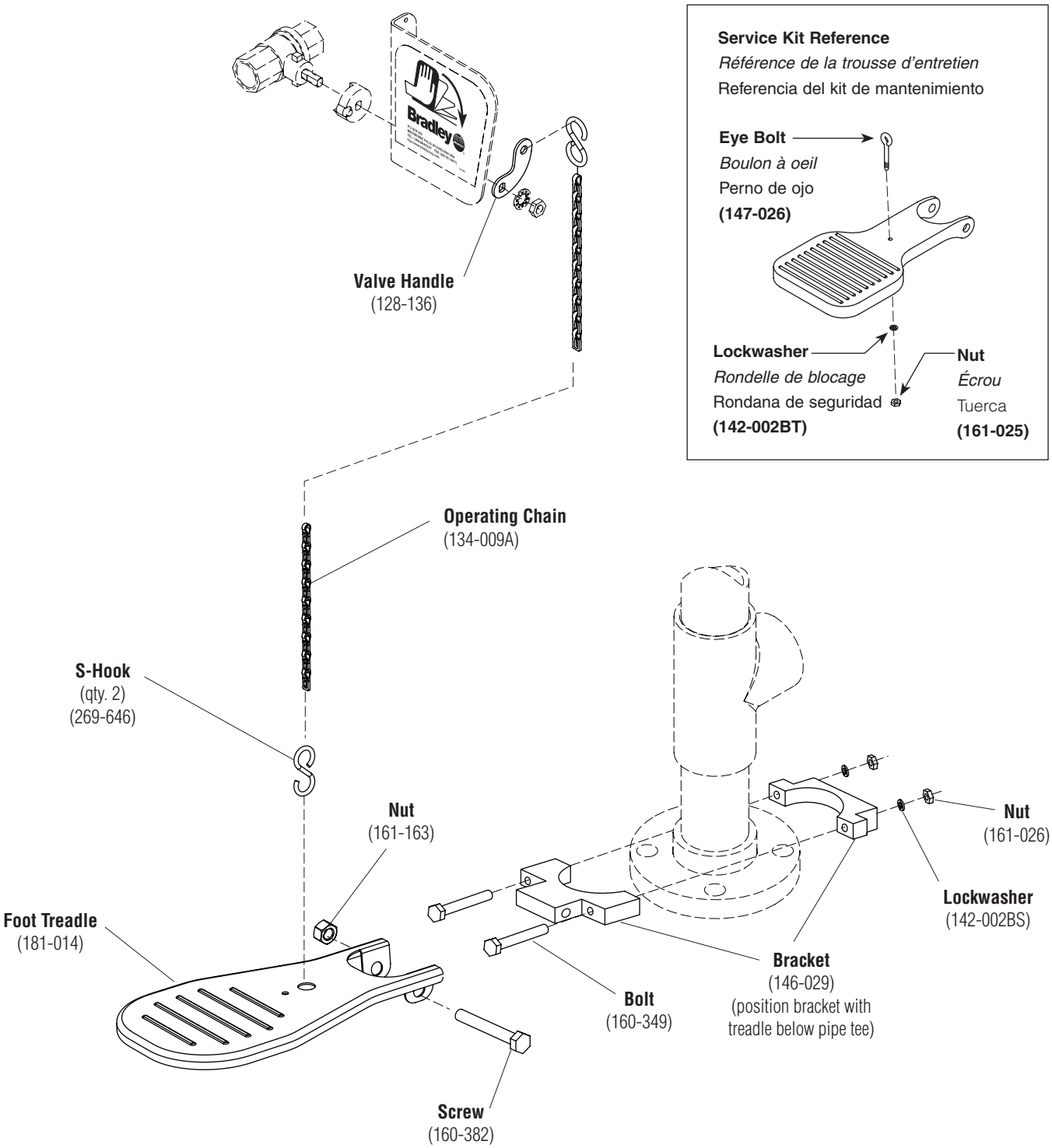

215-1086 Rev. B; ECN 12-05-013A
© 2012 Bradley

P.O. Box 309, Menomonee Falls, WI 53052-0309
TEL. 800.BRADLEY(800.272.3539) FAX 262.251.5817
bradleycorp.com